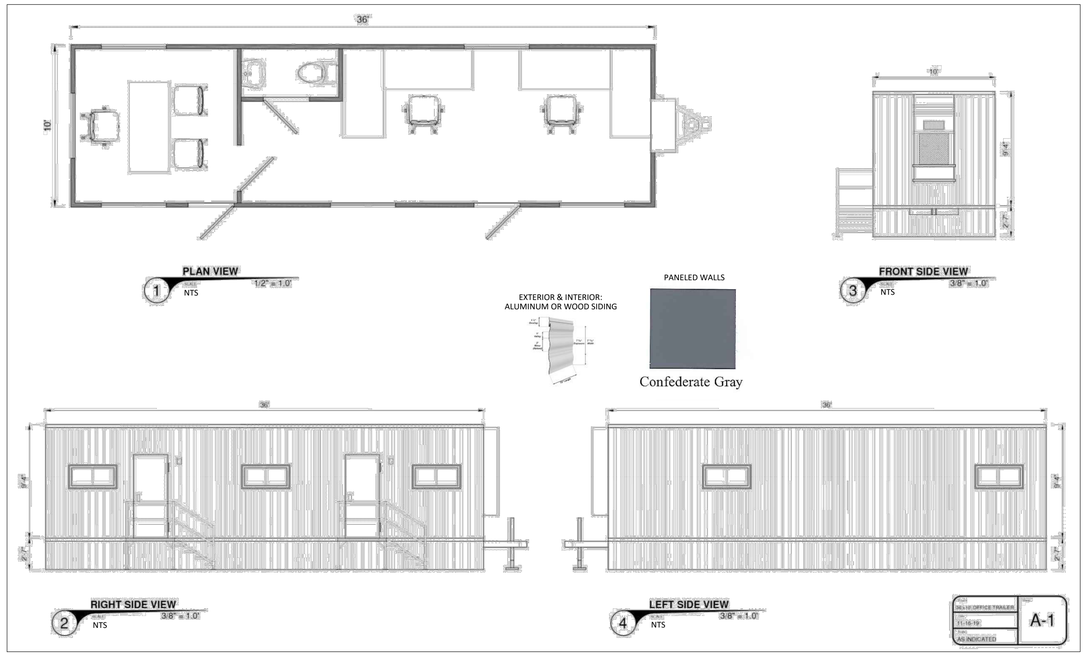

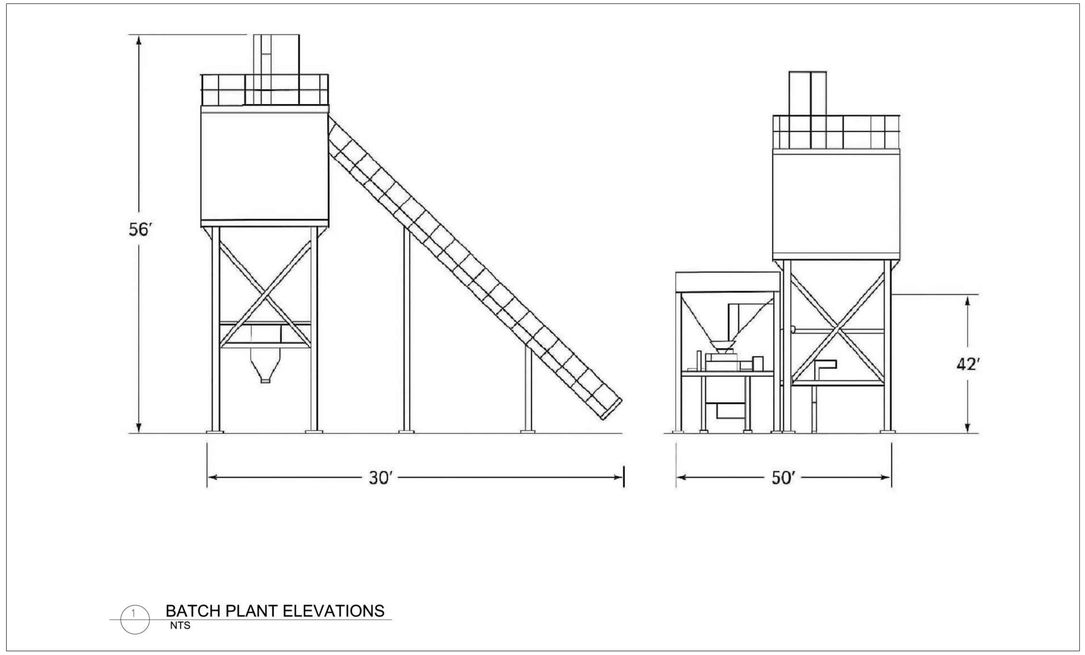

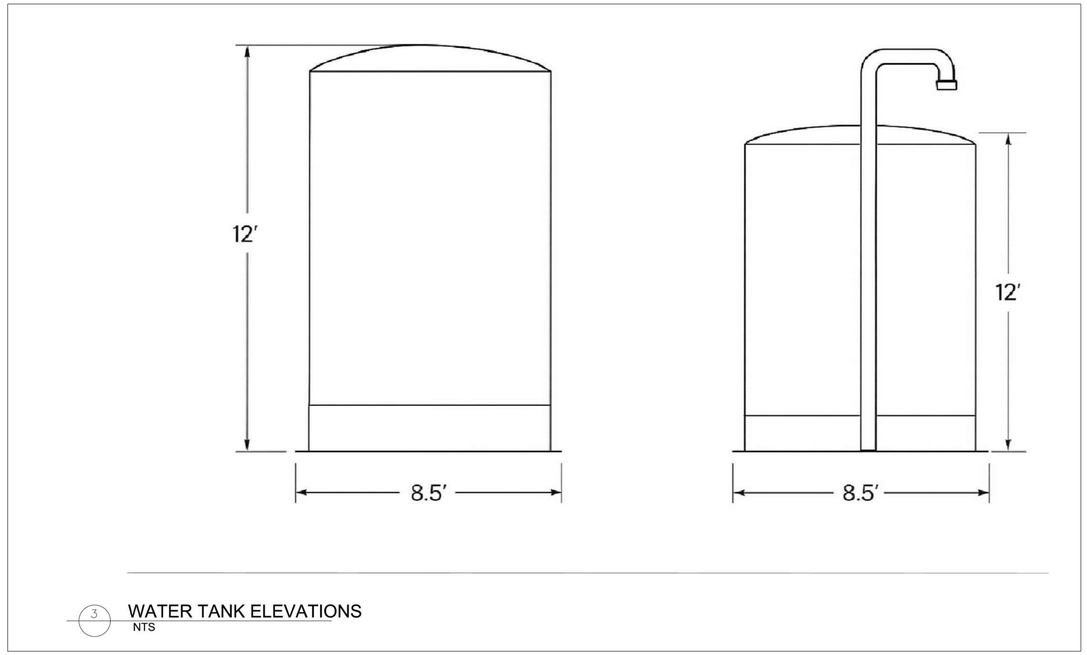

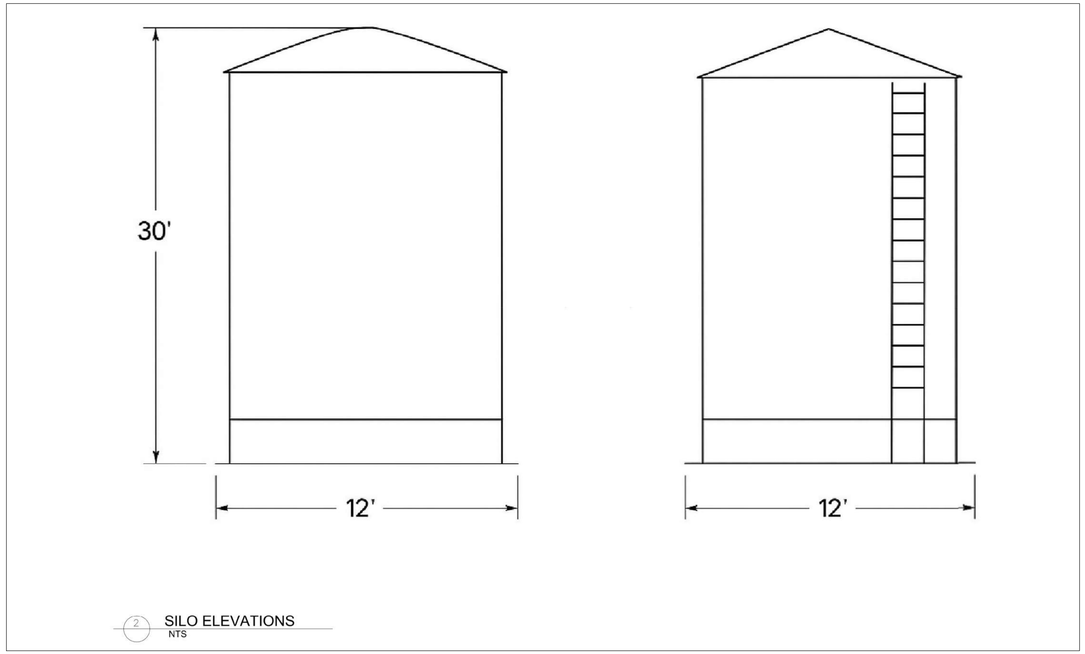

DATE	REVISIONS	DRAWN BY

Manhard CONSULTING
414 Union St, Suite 1911, Nashville, TN, 37201 PH 615.655.6001 manhard.com
Civil Engineers | Surveyors | Water Resource Engineers | Water Engineers
Construction Managers | Environmental Scientists | Landscape Architects | Planners
Tennessee Board of Professional Engineers & Land Surveyors Reg. No. F-10607

ESTRADA CONCRETE

1760 EAST BELT LINE ROAD

STRUCTURE ELEVATIONS

PROJ. MGR.: JG
PROJ. ASSOC.: CA
DRAWN BY: FCR
DATE: 02/10/2026

SHEET
SP1.2

© 2026 MANHARD CONSULTING, ALL RIGHTS RESERVED

PENDING

Plot Date: 02/10/26 Dwg Name: G:\Promotional Projects\Estrada Concrete\Cogwell Batch Plant\Working\Y25 Working\Site Plan.dwg Updated By: carlos.suarez

STORAGE WATER TANK (N.T.S.)

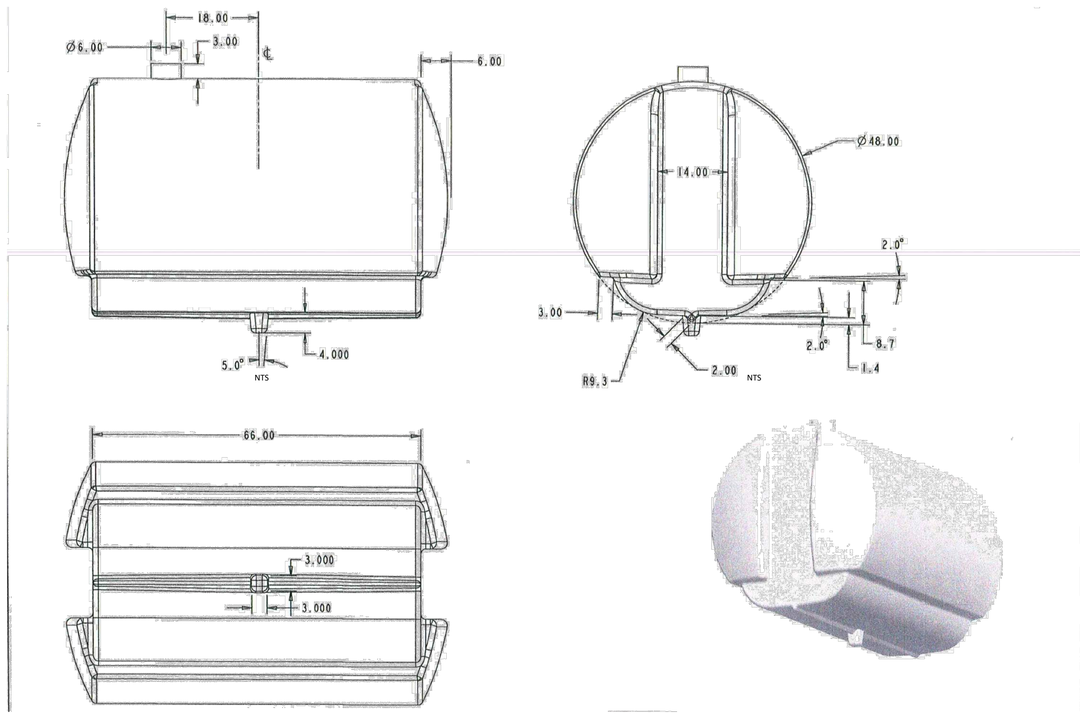

08-05-19

FIRE PROTECTION TANK NOTES:

1. PROVIDE FIRE PROTECTION TANK INSTALLED ON A LEVEL, PROPERLY COMPACTED SUBGRADE OR ENGINEERED CONCRETE FOUNDATION DESIGNED TO PREVENT SETTLEMENT.
2. PROVIDE SEISMIC ANCHORAGE WHERE REQUIRED BY THE AUTHORITY HAVING JURISDICTION (AHJ) AND APPLICABLE CODES.
3. PROVIDE TANK SUCTION/OUTLET PIPING WITH ANTI-VORTEX PLATE. SIZE PIPING TO MEET REQUIRED FIRE FLOW DEMANDS.
4. PROVIDE PERMANENT FILL CONNECTION SIZED TO ALLOW TANK TO BE FILLED WITHIN 8 HOURS, UNLESS OTHERWISE REQUIRED BY AHJ.
5. PROVIDE SCREENED OVERFLOW PIPING SIZED FOR MAXIMUM FILL RATE AND ROUTED TO DISCHARGE AWAY FROM TANK FOUNDATION.
6. PROVIDE 5-INCH STORZ CONNECTION WITH CAP FOR FIRE DEPARTMENT TANKER FILL, LOCATED AND INSTALLED PER AHJ REQUIREMENTS.
7. PROVIDE MINIMUM 24– INCH DIAMETER MANWAY FOR INSPECTION AND MAINTENANCE ACCESS.
8. PROVIDE LADDERS AND PLATFORMS AS REQUIRED. LADDERS SHALL BE OSHA-COMPLIANT WHERE APPLICABLE.
9. PROVIDE EXTERNAL WATER LEVEL INDICATOR AND LOW-WATER ALARM TO MONITOR AVAILABLE FIRE PROTECTION STORAGE.
10. PROVIDE APPROVED INTERIOR EPOXY COATING AND REQUIRED CORROSION PROTECTION. PROVIDE CATHODIC PROTECTION WHERE REQUIRED BY SOIL OR SITE CONDITIONS.
11. UPON COMPLETION, PERFORM LEAK TESTING AND OPERATIONAL FLOW TESTING TO VERIFY SYSTEM PERFORMANCE.
12. LABEL TANK WITH CAPACITY AND USE (E.G., "FIRE PROTECTION ONLY").
13. MAINTAIN A MINIMUM 1-FOOT FREEBOARD BETWEEN MAXIMUM WATER LEVEL AND OVERFLOW.
14. MAINTAIN AREA SURROUNDING TANK FREE OF COMBUSTIBLE MATERIALS.
15. OWNER SHALL PROVIDE AND MAINTAIN FREEZE PROTECTION FOR FIRE PROTECTION TANK, PIPING, VALVES, AND APPURTENANCES AT ALL TIMES TO PREVENT FREEZING AND MAINTAIN SYSTEM OPERABILITY.

PORTABLE RESTROOM (N.T.S.)

DATE	REVISIONS	DRAWN BY

Manhard CONSULTING
414 Union St. Suite 1911, Nashville, TN. 37201. PH:615.608.6001 manhard.com
Civil Engineers | Surveyors | Water Resource Engineers | Water & Wastewater Engineers
Construction Managers | Environmental Scientists | Landscape Architects | Planners
Tennessee Board of Professional Engineers & Land Surveyors Reg. No. F-10667

ESTRADA CONCRETE

1760 EAST BELT LINE ROAD

STRUCTURE ELEVATIONS

PROJ. MGR.: JG
PROJ. ASSOC.: CA
DRAWN BY: FCR
DATE: 02/10/2026

SHEET

SP1.3

© 2026 MANHARD CONSULTING, ALL RIGHTS RESERVED

PENDING

Plot Date: 02/10/26 Dwg Name: G:\Promotional Projects\Estrada Concrete\Cobell Batch Plant\Working\Y26\ Working\Site Plan.dwg Updated By: carlos.alvarez