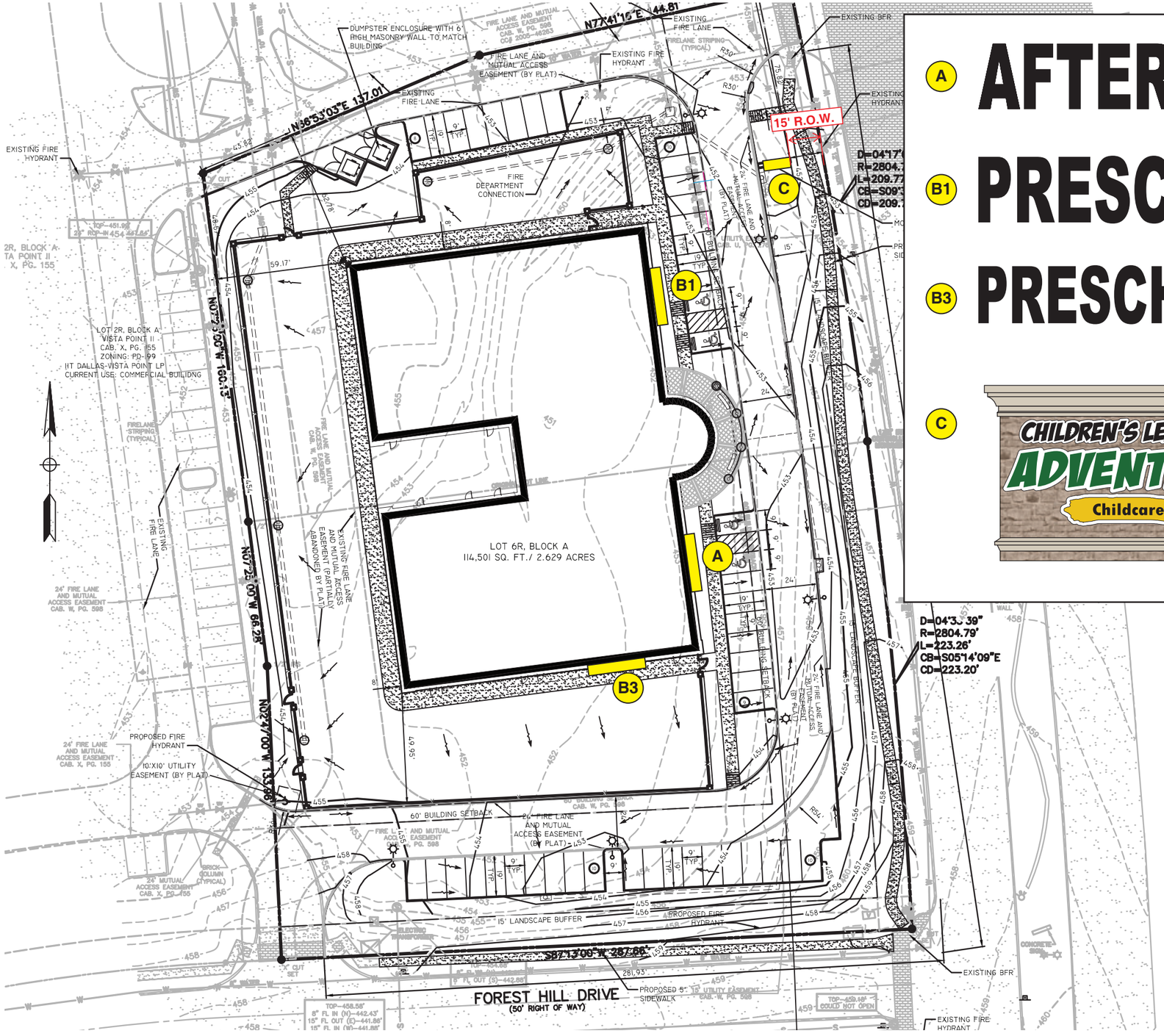

A AFTERSCHOOL

B1 PRESCHOOL

B3 PRESCHOOL

C

CHILDREN'S LEARNING™ ADVENTURE
Childcare Centers

I HAVE CAREFULLY REVIEWED AND HEREBY ACCEPT THE DRAWING(S) AS SHOWN. I REALIZE THAT ANY CHANGES TO THESE DESIGNS MADE BEFORE OR AFTER PRODUCTION MAY ALTER THE CONTRACT PRICE. ALL CHANGES MUST BE IN WRITING AND APPROVED BY BOTH PARTIES PRIOR TO PRODUCTION.

SIGNATURE & DATE

THE CUSTOM ARTWORK DEPICTED HEREIN IS FOR REPRESENTATIONAL PURPOSES ONLY AND MAY NOT EXACTLY MATCH THE COLORS OF THE MATERIALS PROPOSED FOR USAGE.

ELECTRIC SIGNS PRODUCED AT IMAGE WORKS CONFORM TO UL 48 STANDARDS AND DISPLAY THE UNDERWRITERS LABORATORIES LABEL.

ALL ONSITE PRIMARY ELECTRICAL CONNECTIONS BY OTHERS.

DATE	REVISION DESCRIPTION	DESIGNER
5.1.13	REVISE SIGN SCHEDULE	WAM
5.6.13	REVISE SIGN SCHEDULE	WAM
5.7.13	REVISE SITE PLAN	WAM

IMAGEWORKS
11046 LEADBETTER ROAD ASHLAND, VA 23005
PHONE: 804.798.5533 FAX: 804.798.5582

CHILDREN'S LEARNING ADVENTURE — CLIENT
COPPELL, TX — LOCATION
KARL UFTRING — SALES REPRESENTATIVE
WAM — DESIGNER
4.16.13 — DATE PREPARED
N.T.S. — SCALE
CLA-TXxxx-02 — PROJECT ID
SITE R3 — DRAWING IDENTIFICATION / QUOTE NUMBER
\CLIENTS FOLDER\Childrens Learning Adventure\TXxxx - Coppell, TX (The Colony)\

THIS IS AN ORIGINAL UNPUBLISHED DRAWING CREATED BY IMAGE WORKS AND COPYRIGHT LAWS APPLY. IT IS SUBMITTED FOR YOUR PERSONAL USE WITHIN CONNECTION WITH A PROJECT BEING PREPARED FOR YOU BY IMAGE WORKS. IT IS NOT TO BE SHOWN TO ANYONE OUTSIDE OF YOUR ORGANIZATION, NOR IS IT TO BE USED, REPRODUCED OR EXHIBITED IN ANY FASHION.

CHILDREN'S LEARNING ADVENTURE
Childcare Centers

SITE PLAN

N

STORE # : xxx

ADDRESS: MACARTHUR BLVD & FOREST HILLS DR.
COPPELL, TX

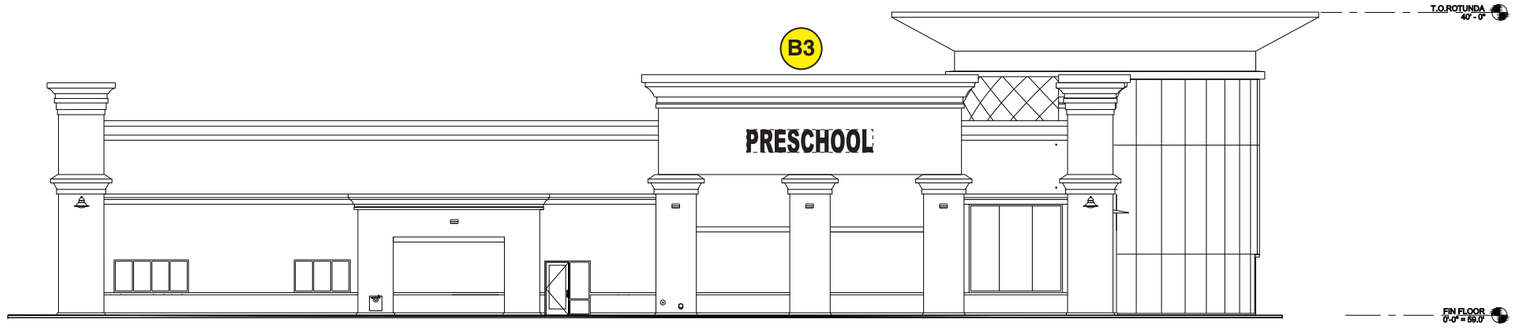

SOUTH ELEVATION N.T.S. B3 SQ. FT=50

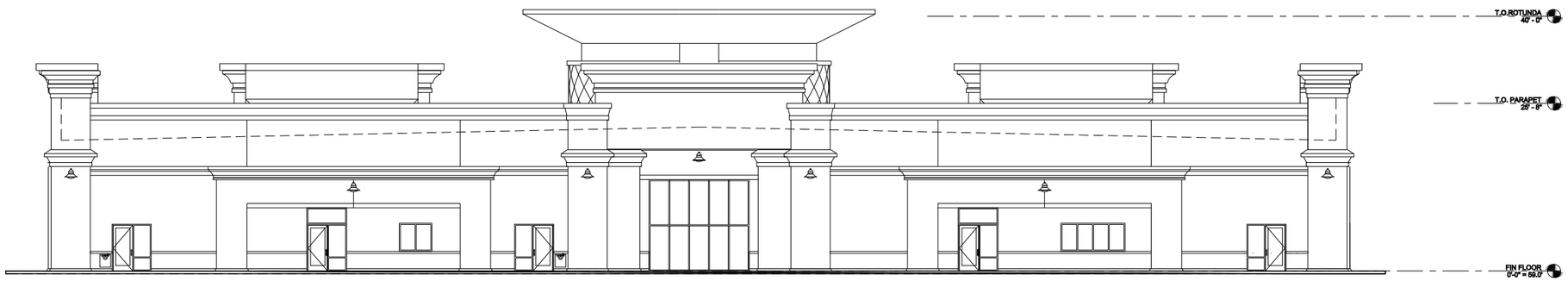

WEST ELEVATION N.T.S.

NORTH ELEVATION N.T.S.

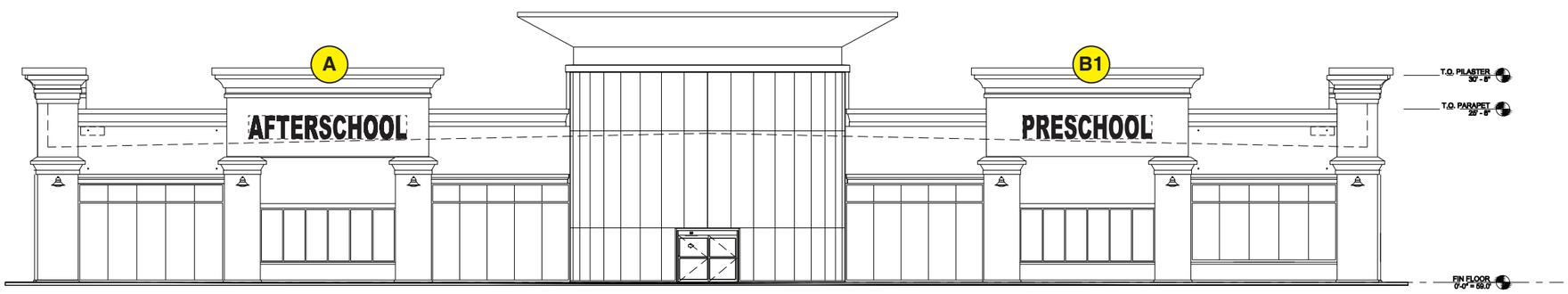

EAST ELEVATION N.T.S. A B1 COMBINED SQ. FT=147

I HAVE CAREFULLY REVIEWED AND HEREBY ACCEPT THE DRAWING(S) AS SHOWN. I REALIZE THAT ANY CHANGES TO THESE DESIGNS MADE BEFORE OR AFTER PRODUCTION MAY ALTER THE CONTRACT PRICE. ALL CHANGES MUST BE IN WRITING AND APPROVED BY BOTH PARTIES PRIOR TO PRODUCTION.

SIGNATURE & DATE

THE CUSTOM ARTWORK DEPICTED HEREIN IS FOR REPRESENTATIONAL PURPOSES ONLY AND MAY NOT EXACTLY MATCH THE COLORS OF THE MATERIALS PROPOSED FOR USAGE.

ELECTRIC SIGNS PRODUCED AT IMAGE WORKS CONFORM TO UL 48 STANDARDS AND DISPLAY THE UNDERWRITERS LABORATORIES LABEL.

ALL ONSITE PRIMARY ELECTRICAL CONNECTIONS BY OTHERS.

DATE	REVISION DESCRIPTION	DESIGNER
5.1.13	REVISE SOUTH ELE SIGNAGE	WAM
5.6.13	REVISE EAST, NORTH, SOUTH ELE SIGNAGE	WAM

IMAGEWORKS
11046 LEADBETTER ROAD ASHLAND, VA 23005
PHONE: 804.798.5533 FAX: 804.798.5582

CHILDREN'S LEARNING ADVENTURE
CLIENT

COPPELL, TX
LOCATION

KARL UFTRING
SALES REPRESENTATIVE

WAM
DESIGNER

4.16.13
DATE PREPARED

N.T.S.
SCALE

CLA-TXxxx-02
PROJECT ID

ELE R2
DRAWING IDENTIFICATION QUOTE NUMBER

\CLIENTS FOLDER\Childrens Learning Adventure\TXxxx - Coppell, TX (The Colony)\

THIS IS AN ORIGINAL UNPUBLISHED DRAWING CREATED BY IMAGE WORKS AND COPYRIGHT LAWS APPLY. IT IS SUBMITTED FOR YOUR PERSONAL USE WITHIN CONNECTION WITH A PROJECT BEING PREPARED FOR YOU BY IMAGE WORKS. IT IS NOT TO BE SHOWN TO ANYONE OUTSIDE OF YOUR ORGANIZATION, NOR IS IT TO BE USED, REPRODUCED OR EXHIBITED IN ANY FASHION.

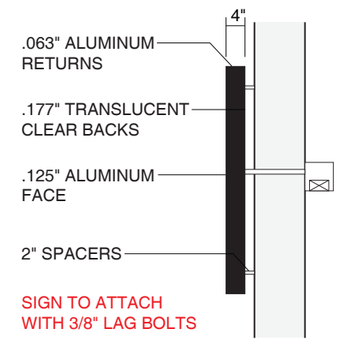

B1 INTERNALLY ILLUMINATED REVERSE LIT CHANNEL LETTERS

66 SQ. FT.

(1) REQUIRED

LETTER CONSTRUCTION
BACKS: .177" TRANSLUCENT CLEAR
BAFFLE: N/A
RETURNS: 4" DEEP, .063" ALUMINUM
TRIM CAP: N/A
RETAINER: N/A
SELF-CONTAINED: N/A
REMOTE: YES
RACEWAY: N/A

FACE DETAILS
FACE: .125" ALUMINUM

ILLUMINATION
LED: WHITE LED
VOLTAGE: 120V

ELECTRICAL 120V

REQUIREMENTS FOR ELECTRICAL ILLUMINATION
PRIMARY ELECTRICAL LOCATION IS PROVIDED BY OTHERS. A DEDICATED CIRCUIT WITH NO SHARED NEUTRALS AND A GROUND RETURNING TO THE PANEL IS REQUIRED FOR ALL INSTALLATIONS

ALL SIGNS HAVE:
-DEDICATED BRANCH CIRCUITS
-THREE WIRES: LINE, NEUTRAL & GROUND
-WIRE SIZE: MINIMUM 12 GAUGE THN COPPER

ALSO NOTE; GAUGE OF COPPER IS DETERMINED BY THE LENGTH OF RUN & AMPERAGE AS PER NEC ARTICLE 300.
- GROUND WIRE MUST BE CONTINUOUS AND GO FROM THE SIGN TO THE PANEL BOARD GROUND BUS
-VOLTAGE SHOULD READ NO MORE THAN (3) VOLTS BETWEEN GROUND AND NEUTRAL
- CONDUIT CAN NOT BE USED AS A GROUND PATH.

COLOR KEY

PAINT
SATIN FINISH BLACK

END VIEW

I HAVE CAREFULLY REVIEWED AND HEREBY ACCEPT THE DRAWING(S) AS SHOWN. I REALIZE THAT ANY CHANGES TO THESE DESIGNS MADE BEFORE OR AFTER PRODUCTION MAY ALTER THE CONTRACT PRICE. ALL CHANGES MUST BE IN WRITING AND APPROVED BY BOTH PARTIES PRIOR TO PRODUCTION.

SIGNATURE & DATE

THE CUSTOM ARTWORK DEPICTED HEREIN IS FOR REPRESENTATIONAL PURPOSES ONLY AND MAY NOT EXACTLY MATCH THE COLORS OF THE MATERIALS PROPOSED FOR USAGE.

ELECTRIC SIGNS PRODUCED AT IMAGE WORKS CONFORM TO UL 48 STANDARDS AND DISPLAY THE UNDERWRITERS LABORATORIES LABEL.

ALL ONSITE PRIMARY ELECTRICAL CONNECTIONS BY OTHERS.

DATE	REVISION DESCRIPTION	DESIGNER
5.1.13	REVISE QTY.	WAM
5.6.13	REVISE QTY., DIMENSIONS	WAM

IMAGEWORKS
11046 LEADBETTER ROAD ASHLAND, VA 23005
PHONE: 804.798.5533 FAX: 804.798.5582

CHILDREN'S LEARNING ADVENTURE
CLIENT

COPPELL, TX
LOCATION

KARL UFTRING
SALES REPRESENTATIVE

WAM
DESIGNER

4.16.13
DATE PREPARED

3/8"=1'-0"
SCALE

CLA-TXxxx-02
PROJECT ID

CL 1 R2
DRAWING IDENTIFICATION QUOTE NUMBER

\CLIENTS FOLDER\Childrens Learning Adventure\TXxxx - Coppell, TX (The Colony)\

THIS IS AN ORIGINAL UNPUBLISHED DRAWING CREATED BY IMAGE WORKS AND COPYRIGHT LAWS APPLY. IT IS SUBMITTED FOR YOUR PERSONAL USE WITHIN CONNECTION WITH A PROJECT BEING PREPARED FOR YOU BY IMAGE WORKS. IT IS NOT TO BE SHOWN TO ANYONE OUTSIDE OF YOUR ORGANIZATION, NOR IS IT TO BE USED, REPRODUCED OR EXHIBITED IN ANY FASHION.

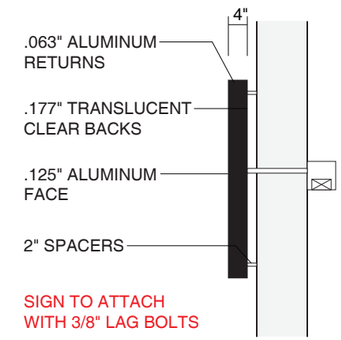

END VIEW

A INTERNALLY ILLUMINATED REVERSE LIT CHANNEL LETTERS

81 SQ. FT.

(1) REQUIRED

LETTER CONSTRUCTION
BACKS: .177" TRANSLUCENT CLEAR
BAFFLE: N/A
RETURNS: 4" DEEP, .063" ALUMINUM
TRIM CAP: N/A
RETAINER: N/A
SELF-CONTAINED: N/A
REMOTE: YES
RACEWAY: N/A

FACE DETAILS
FACE: .125" ALUMINUM

ILLUMINATION
LED: WHITE LED
VOLTAGE: 120V

ELECTRICAL 120V

REQUIREMENTS FOR ELECTRICAL ILLUMINATION
PRIMARY ELECTRICAL LOCATION IS PROVIDED BY OTHERS. A DEDICATED CIRCUIT WITH NO SHARED NEUTRALS AND A GROUND RETURNING TO THE PANEL IS REQUIRED FOR ALL INSTALLATIONS

ALL SIGNS HAVE:
-DEDICATED BRANCH CIRCUITS
-THREE WIRES: LINE, NEUTRAL & GROUND
-WIRE SIZE: MINIMUM 12 GAUGE THN COPPER

ALSO NOTE; GAUGE OF COPPER IS DETERMINED BY THE LENGTH OF RUN & AMPERAGE AS PER NEC ARTICLE 300.
- GROUND WIRE MUST BE CONTINUOUS AND GO FROM THE SIGN TO THE PANEL BOARD GROUND BUS
-VOLTAGE SHOULD READ NO MORE THAN (3) VOLTS BETWEEN GROUND AND NEUTRAL
- CONDUIT CAN NOT BE USED AS A GROUND PATH.

COLOR KEY

PAINT
SATIN FINISH BLACK

I HAVE CAREFULLY REVIEWED AND HEREBY ACCEPT THE DRAWING(S) AS SHOWN. I REALIZE THAT ANY CHANGES TO THESE DESIGNS MADE BEFORE OR AFTER PRODUCTION MAY ALTER THE CONTRACT PRICE. ALL CHANGES MUST BE IN WRITING AND APPROVED BY BOTH PARTIES PRIOR TO PRODUCTION.

SIGNATURE & DATE

THE CUSTOM ARTWORK DEPICTED HEREIN IS FOR REPRESENTATIONAL PURPOSES ONLY AND MAY NOT EXACTLY MATCH THE COLORS OF THE MATERIALS PROPOSED FOR USAGE.

ELECTRIC SIGNS PRODUCED AT IMAGE WORKS CONFORM TO UL 48 STANDARDS AND DISPLAY THE UNDERWRITERS LABORATORIES LABEL.

ALL ONSITE PRIMARY ELECTRICAL CONNECTIONS BY OTHERS.

DATE	REVISION DESCRIPTION	DESIGNER
5.1.13	REVISE QTY.	WAM
5.6.13	REVISE QTY., DIMENSIONS	WAM

IMAGEWORKS
11046 LEADBETTER ROAD ASHLAND, VA 23005
PHONE: 804.798.5533 FAX: 804.798.5582

CHILDREN'S LEARNING ADVENTURE
CLIENT

COPPELL, TX
LOCATION

KARL UFTRING
SALES REPRESENTATIVE

WAM
DESIGNER

4.16.13
DATE PREPARED

3/8"=1'-0"
SCALE

CLA-TXxxx-02
PROJECT ID

CL 2 R2
DRAWING IDENTIFICATION QUOTE NUMBER

\CLIENTS FOLDER\Childrens Learning Adventure\TXxxx - Coppell, TX (The Colony)\

THIS IS AN ORIGINAL UNPUBLISHED DRAWING CREATED BY IMAGE WORKS AND COPYRIGHT LAWS APPLY. IT IS SUBMITTED FOR YOUR PERSONAL USE WITHIN CONNECTION WITH A PROJECT BEING PREPARED FOR YOU BY IMAGE WORKS. IT IS NOT TO BE SHOWN TO ANYONE OUTSIDE OF YOUR ORGANIZATION, NOR IS IT TO BE USED, REPRODUCED OR EXHIBITED IN ANY FASHION.

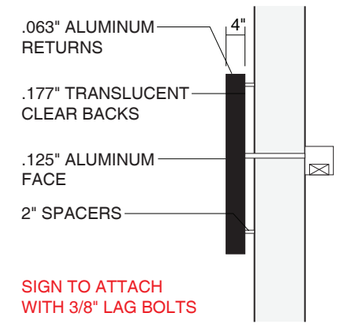

END VIEW

B3 INTERNALLY ILLUMINATED REVERSE LIT CHANNEL LETTERS

50 SQ. FT.

(1) REQUIRED

LETTER CONSTRUCTION
BACKS: .177" TRANSLUCENT CLEAR
BAFFLE: N/A
RETURNS: 4" DEEP, .063" ALUMINUM
TRIM CAP: N/A
RETAINER: N/A
SELF-CONTAINED: N/A
REMOTE: YES
RACEWAY: N/A

FACE DETAILS
FACE: .125" ALUMINUM

ILLUMINATION
LED: WHITE LED
VOLTAGE: 120V

ELECTRICAL 120V

REQUIREMENTS FOR ELECTRICAL ILLUMINATION
PRIMARY ELECTRICAL LOCATION IS PROVIDED BY OTHERS. A DEDICATED CIRCUIT WITH NO SHARED NEUTRALS AND A GROUND RETURNING TO THE PANEL IS REQUIRED FOR ALL INSTALLATIONS

ALL SIGNS HAVE:
-DEDICATED BRANCH CIRCUITS
-THREE WIRES: LINE, NEUTRAL & GROUND
-WIRE SIZE: MINIMUM 12 GAUGE THN COPPER

ALSO NOTE; GAUGE OF COPPER IS DETERMINED BY THE LENGTH OF RUN & AMPERAGE AS PER NEC ARTICLE 300.
- GROUND WIRE MUST BE CONTINUOUS AND GO FROM THE SIGN TO THE PANEL BOARD GROUND BUS
-VOLTAGE SHOULD READ NO MORE THAN (3) VOLTS BETWEEN GROUND AND NEUTRAL
- CONDUIT CAN NOT BE USED AS A GROUND PATH.

COLOR KEY

PAINT
SATIN FINISH BLACK

I HAVE CAREFULLY REVIEWED AND HEREBY ACCEPT THE DRAWING(S) AS SHOWN. I REALIZE THAT ANY CHANGES TO THESE DESIGNS MADE BEFORE OR AFTER PRODUCTION MAY ALTER THE CONTRACT PRICE. ALL CHANGES MUST BE IN WRITING AND APPROVED BY BOTH PARTIES PRIOR TO PRODUCTION.

SIGNATURE & DATE

THE CUSTOM ARTWORK DEPICTED HEREIN IS FOR REPRESENTATIONAL PURPOSES ONLY AND MAY NOT EXACTLY MATCH THE COLORS OF THE MATERIALS PROPOSED FOR USAGE.

ELECTRIC SIGNS PRODUCED AT IMAGE WORKS CONFORM TO UL 48 STANDARDS AND DISPLAY THE UNDERWRITERS LABORATORIES LABEL.

ALL ONSITE PRIMARY ELECTRICAL CONNECTIONS BY OTHERS.

DATE	REVISION DESCRIPTION	DESIGNER
5.1.13	REVISE QTY.	WAM
5.6.13	REVISE QTY., DIMENSIONS	WAM

IMAGEWORKS
11046 LEADBETTER ROAD ASHLAND, VA 23005
PHONE: 804.798.5533 FAX: 804.798.5582

CHILDREN'S LEARNING ADVENTURE
CLIENT

COPPELL, TX
LOCATION

KARL UFTRING
SALES REPRESENTATIVE

WAM
DESIGNER

4.16.13
DATE PREPARED

3/8"=1'-0"
SCALE

CLA-TXxxx-02
PROJECT ID

CL 3 R2
DRAWING IDENTIFICATION QUOTE NUMBER

\CLIENTS FOLDER\Childrens Learning Adventure\TXxxx - Coppell, TX (The Colony)\

THIS IS AN ORIGINAL UNPUBLISHED DRAWING CREATED BY IMAGE WORKS AND COPYRIGHT LAWS APPLY. IT IS SUBMITTED FOR YOUR PERSONAL USE WITHIN CONNECTION WITH A PROJECT BEING PREPARED FOR YOU BY IMAGE WORKS. IT IS NOT TO BE SHOWN TO ANYONE OUTSIDE OF YOUR ORGANIZATION, NOR IS IT TO BE USED, REPRODUCED OR EXHIBITED IN ANY FASHION.

C **D/F HALO ILLUMINATED MONUMENT SIGN** 60 SQ. FT.
(1) REQUIRED

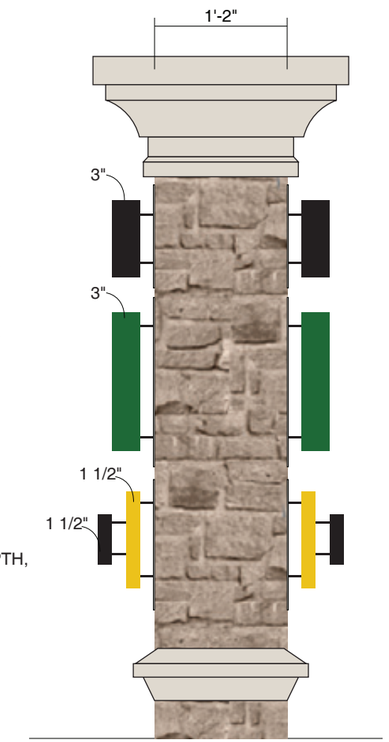

END VIEW

MASONRY

BORAL CULTURED STONE - COBBLEFIELD "TEXAS CREAM"

I HAVE CAREFULLY REVIEWED AND HEREBY ACCEPT THE DRAWING(S) AS SHOWN. I REALIZE THAT ANY CHANGES TO THESE DESIGNS MADE BEFORE OR AFTER PRODUCTION MAY ALTER THE CONTRACT PRICE. ALL CHANGES MUST BE IN WRITING AND APPROVED BY BOTH PARTIES PRIOR TO PRODUCTION.

SIGNATURE & DATE

THE CUSTOM ARTWORK DEPICTED HEREIN IS FOR REPRESENTATIONAL PURPOSES ONLY AND MAY NOT EXACTLY MATCH THE COLORS OF THE MATERIALS PROPOSED FOR USAGE.

ELECTRIC SIGNS PRODUCED AT IMAGE WORKS CONFORM TO UL 48 STANDARDS AND DISPLAY THE UNDERWRITERS LABORATORIES LABEL.

ALL ONSITE PRIMARY ELECTRICAL CONNECTIONS BY OTHERS.

DATE	REVISION DESCRIPTION	DESIGNER
5.2.13	REVISE BOTTOM PANEL LAYOUT	WAM
5.6.13	REVISE MATERIAL, CONSTRUCTION	WAM
5.7.13	REVISE TRIM MATERIAL - CULTURED STONE	WAM

IMAGEWORKS
11046 LEADBETTER ROAD ASHLAND, VA 23005
PHONE: 804.798.5533 FAX: 804.798.5582

CHILDREN'S LEARNING ADVENTURE
CLIENT

COPPELL, TX
LOCATION

KARL UFTRING
SALES REPRESENTATIVE

WAM
DESIGNER

4.16.13
DATE PREPARED

3/4"=1'-0"
SCALE

CLA-TXxxx-02
PROJECT ID

MONUMENT R3
DRAWING IDENTIFICATION QUOTE NUMBER

\CLIENTS FOLDER\Childrens Learning Adventure\TXxxx - Coppell, TX (The Colony)\

THIS IS AN ORIGINAL UNPUBLISHED DRAWING CREATED BY IMAGE WORKS AND COPYRIGHT LAWS APPLY. IT IS SUBMITTED FOR YOUR PERSONAL USE WITHIN CONNECTION WITH A PROJECT BEING PREPARED FOR YOU BY IMAGE WORKS. IT IS NOT TO BE SHOWN TO ANYONE OUTSIDE OF YOUR ORGANIZATION, NOR IS IT TO BE USED, REPRODUCED OR EXHIBITED IN ANY FASHION.