QuikTrip
4705 S. 129th E. Ave. - Tulsa, OK 74134-7008
P.O. Box 3475 - Tulsa, OK 74101-3475
p:918.615.7704

Horizontal Monument Sign
MH10-2P30SF

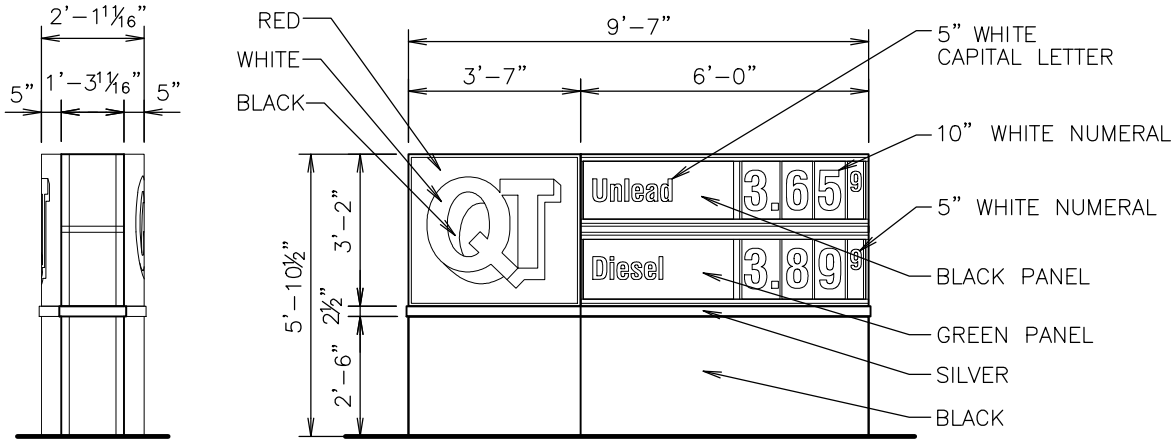

NOTES	
DRAWN BY	
ISSUE DATE	12/3/14

SQUARE FOOTAGE	
TYPEFACE	
INSIDE CAN	
ENTIRE SIGN	30

SPECIFICATIONS:

Logo: Flat Solar grade, Clear Cyro Face, .177 thickness, painted on 2nd surface to match 3M Cardinal Red Translucent #3632-53, Akzo Nobel, no embossment.

Unlead Panel : .177" thickness Cyro Acrylic with 1/4" Radius Corners. Panels are painted 2nd Surface with Akzo Noble Opaque Black Background with Translucent White Text

Diesel Panel: .177" thickness Cyro Acrylic with 1/4" Radius Corners. Panels are painted 3M 3632 GPS-26 Green with Matching PMS #349C Green with Translucent White Text

Logo Cabinet/Pricer Cabinet/Base: Aluminum Construction, Internally illuminated with GE Tetra PowerStrip DS65/GE PS24 Power Supplies. LOGO Cabinet painted Akzo Noble, QT Red SIGN9141 Low Gloss. Pricer Cabinet and Base painted Akzo Noble Black Low Gloss. Accent Trim section painted 1st surface Akzo Noble Silver-Low Gloss.

SCALE: 1/4" = 1'-0"

SERIAL NUMBER: MH10-2P30SF

STORE NUMBER:

C:\Vault_QT\Library\Presentation\Elevations\Signage\Standard Monument Signs\MH10-2P30SF.dwg - I_#00 PlotDate: 12/10/2014 3:52 PM - Kim, Joe