LANDSCAPE NOTES:

1. CONTRACTOR IS RESPONSIBLE FOR LOCATING ALL ABOVE GROUND AND UNDERGROUND UTILITIES PRIOR TO LANDSCAPE INSTALLATION. *EXTREME CARE AND CAUTION SHOULD BE EXERCISED WHEN EXCAVATING. CONTRACTOR SHALL BE RESPONSIBLE FOR ANY DAMAGE AND SUBSEQUENT REPAIR TO ANY EXISTING UTILITIES.

2. ALL AREAS DISTURBED DURING CONSTRUCTION SHALL RECEIVE BERMUDA GRASS HYDROMULCH UNLESS OTHERWISE NOTED.

3. ALL SHADE TREES SHALL BE LOCATED NO CLOSER THAN 25' FROM THE CENTERLINE OF ALL OVERHEAD UTILITIES.

4. ALL TREES SHALL BE LOCATED NO CLOSE THAN 4' FROM THE CENTERLINE OF ALL BELOW GROUND UTILITIES.

5. UPON COMPLETION OF CONSTRUCTION, CONTRACTOR SHALL REMOVE ALL CONSTRUCTION RELATED TRASH AND DEBRIS FROM THE PROJECT LIMITS AND DISPOSE OFF-SITE.

6. EXISTING TREE LOCATIONS AND TREE REMOVAL ARE LOCATED ON SHT. L0.01.

PLANTING NOTES:

1. FINAL SELECTION OF PLANT TYPES TO BE SELECTED FROM THE CITY OF COPPELL APPROVED LIST OF PLANTS.

2. TREES PLANTED IN TEXAS POWER AND LIGHT CO. EASEMENT TO BE SELECTED FROM ONCOR APPROVED LIST OF TREES.

IRRIGATION NOTES:

1. ALL LANDSCAPE AREAS SHALL BE IRRIGATED BY AN AUTOMATIC IRRIGATION SYSTEM DESIGNED BY A TEXAS LICENSED IRRIGATOR.

2. ALL SHRUB BEDS TO RECEIVE DRIP IRRIGATION. ALL INDIVIDUAL TREES IN LANDSCAPE GRAVEL TO RECEIVE BUBBLER IRRIGATION.

3. IRRIGATION SYSTEM TO BE OPERATED WITH AN ET-BASED TWO WIRE IRRIGATION CONTROLLER THAT SHALL INCLUDE RAIN AND FREEZE SENSOR.

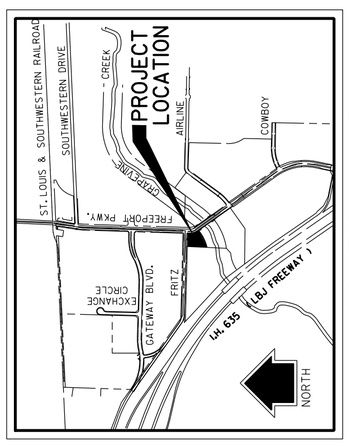

LOCATION MAP
NOT TO SCALE

N

0 20 40 60 80
SCALE: 1"=40'

City of Coppell - Chapter 12 - Article 34 Landscape Requirements: Naterra Warehouse			
Site Description:		BMSC Warehouse	
Zoning:		Light Industrial	
Total Site Area:		510,709.18 S.F.	
Building Area:		137,201 S.F.	
Non-vehicular Paving Area:		8,190 S.F.	
Vehicular Paving Area:		43,048 S.F.	60,987 S.F. (Future Parking)
Exempt Vehicular Paving Area:		31,273 S.F.	
Requirements:		Required	Provided
Required Landscape Areas:	15' R.O.W. Buffer (991 L.F.)	14,865 S.F.	29,730 S.F.
	10' Perimeter Buffer (577 L.F.)	5,770 S.F.	5,770 S.F.
	10% Interior Landscape Area	4,304 S.F.	7,683 S.F.
	15% Open Space	56,026 S.F.	240,020 S.F.
	Total Landscape Area	80,965 S.F.	283,203 S.F.
Required Future Landscape Areas:	15' R.O.W. Buffer (991 L.F.)	14,865 S.F.	29,730 S.F.
	10' Perimeter Buffer (577 L.F.)	5,770 S.F.	5,770 S.F.
	10% Interior Landscape Area	6,099 S.F.	7,683 S.F.
	15% Open Space	56,026 S.F.	222,081 S.F.
	Total Landscape Area	82,760 S.F.	265,264 S.F.
Tree Requirements (Qty's Based on Future Parking):	Interior Landscape Trees: 1/400 S.F. (Qty Based on Caliper Inch)	(11 Trees) 33"	*(15 - 4" Cal. Trees) 60" (8 - 3" Cal. Trees) 24"
	Buffer Trees: 1/50 L.F. (Qty Based on Caliper Inch) (1,568 L.F.)	(31 Trees) 93"	(8 - 4" Cal. Trees) 32" (42 - 3" Cal. Trees) 126"
	Open Space Trees: 1/4,000 S.F. (Qty Based on Caliper Inch)	(14 Trees) 42"	*(54 - 4" Cal. Trees) 216" (8 - 3" Cal. Trees) 24"
	Total Trees (In Caliper Inch):	(56 Trees) 168"	(135 Trees) 482"

* Additional Trees necessary per Landscape and Mitigation Requirements. Ref sht. L0.04

OWNER
SFPLP HOLDINGS MANAGEMENT LLC
1250 SOUTH FREEPORT PARKWAY
COPPELL, TX. 75081
CONTACT: RALPH NOVAK
TEL: 817-851-4723
EMAIL: RNovak@beautymanufacture.com

LANDSCAPE ARCHITECT
HALFF ASSOCIATES, INC.
1201 N. BOWSER RD.
RICHARDSON, TX. 75081
CONTACT: KIRK WILSON
TEL: 214-346-6366
FAX: 214-739-0095
TBPE FIRM # F-312
EMAIL: kwilson@halff.com

L1.02 - LANDSCAPE PLAN

OF A

LOT 1R, BLOCK A
& LOT 3, BLOCK A
11.72 ACRE TRACT

SITUATED IN THE

JOEL WILSON SURVEY, ABSTRACT NO. 1555
&
JAMES A. SIMMONS SURVEY, ABSTRACT NO. 1296
CITY OF COPPELL, DALLAS COUNTY, TEXAS

FOR

NATERRA INTERNATIONAL INC.

BY

HALFF®
1201 NORTH BOWSER ROAD RICHARDSON, TEXAS 75081 (214) 346-6200
TBPLS FIRM NO. 10029600

AVO: 31760 SCALE: AS SHOWN FEBRUARY 20, 2017

2/2

LEGEND

SYMBOL	DESCRIPTION
	4" CAL. SOUTHERN LIVE OAK Quercus virginiana
	4" CAL. SHUMARD RED OAK Quercus shumardii
	3" CAL. POSSUMHAW HOLLY Ilex decidua
	3" CAL. FLAMELEAF SUMAC Rhus lanceolata
	3 GAL. INDIAN HAWTHORN Rhapiolepsis indica
	3 GAL. DWARF WAX MYRTLE Myrica cerifera var. pumila
	3 GAL. DWARF YAUPON Ilex vomitoria 'Nana'
	3 GAL. MUHLY GRASS Muhlenbergia sp.
	1 GAL. DWARF MONDO GRASS Ophiopogon japonicus
	BERMUDA GRASS HYDROMULCH Cynodon dactylon
	LANDSCAPE GRAVEL REF. SHT. L2.01/08 FOR MORE INFORMATION

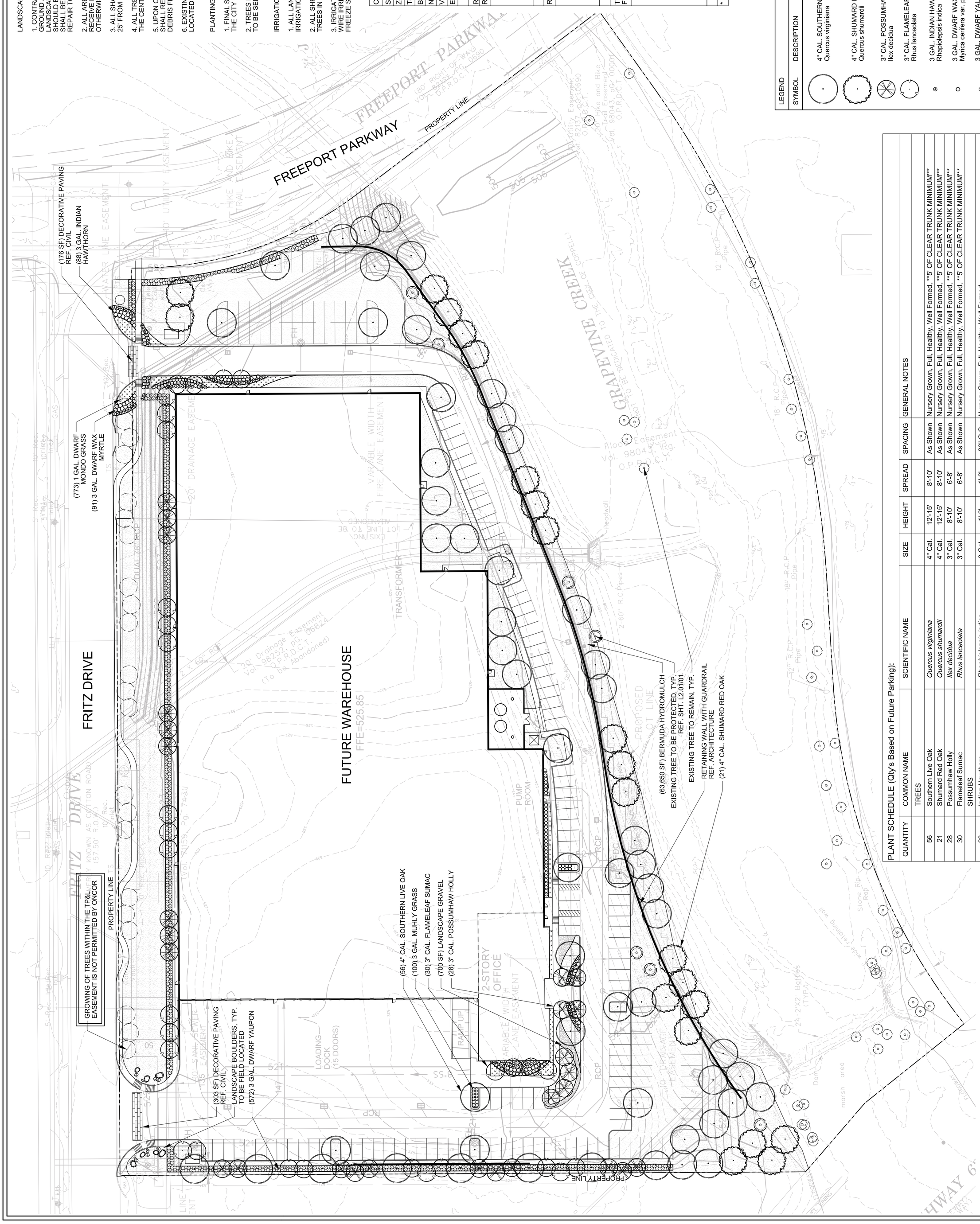

1 LANDSCAPE PLAN
SCALE: 1" = 40'-0"

PLANT SCHEDULE (Qty's Based on Future Parking):

QUANTITY	COMMON NAME	SCIENTIFIC NAME	SIZE	HEIGHT	SPREAD	SPACING	GENERAL NOTES
	TREES						
56	Southern Live Oak	*Quercus virginiana*	4" Cal.	12'-15'	8'-10'	As Shown	Nursery Grown, Full, Healthy, Well Formed, **5' OF CLEAR TRUNK MINIMUM**
21	Shumard Red Oak	*Quercus shumardii*	4" Cal.	12'-15'	8'-10'	As Shown	Nursery Grown, Full, Healthy, Well Formed, **5' OF CLEAR TRUNK MINIMUM**
28	Possumhaw Holly	*Ilex decidua*	3" Cal.	8'-10'	6'-8'	As Shown	Nursery Grown, Full, Healthy, Well Formed, **5' OF CLEAR TRUNK MINIMUM**
30	Flameleaf Sumac	*Rhus lanceolata*	3" Cal.	8'-10'	6'-8'	As Shown	Nursery Grown, Full, Healthy, Well Formed, **5' OF CLEAR TRUNK MINIMUM**
	SHRUBS						
88	Indian Hawthorn	*Rhaphiolepsis indica*	3 Gal.	1'-3'	1'-3'	36" O.C.	Nursery Grown, Full, Healthy, Well Formed
91	Dwarf Wax Myrtle	*Myrica cerifera var. pumila*	3 Gal.	1'-3'	1'-3'	36" O.C.	Nursery Grown, Full, Healthy, Well Formed
572	Dwarf Yaupon	*Ilex vomitoria 'Nana'*	3 Gal.	1'-3'	1'-3'	36" O.C.	Nursery Grown, Full, Healthy, Well Formed
100	Muhly Grass	*Muhlenbergia sp.*	3 Gal.	1'-3'	1'-3'	36" O.C.	Nursery Grown, Full, Healthy, Well Formed
	GROUNDCOVERS						
773	Dwarf Mondo Grass	*Ophiopogon Japonicus*	1 Gal.	6"-8"	10"-12"	18" O.C.	Nursery Grown, Full, Healthy, Well Formed
	GRASS SEED						
63,650 SF	Bermuda Hydromulch	*Cynodon dactylon*	SEED				Seed Rate, 5-8 lbs Pure Live Seed/1,000 SF Hydromulch
	LANDSCAPE GRAVEL						
700 SF	Tejas Black Decomposed Granite						Washed and Clean of Debris/5" Thickness Installed & Compacted Per Detail

Exhibit "E" 1 of 2

Exhibit "E" 2 of 2

PLANTING SPECIFICATIONS

NOTE: All tree plantings to recieve a Pro-active Micorrhizal treatment at time of planting and during "establishment" as specified by (Plant Health Care, Inc.) www.planthealthcare.com 1.800.421.9051

PREPARATION
LANDSCAPE CONTRACTOR AND REPRESENTATIVE OF OWNER SHALL BE RESPONSIBLE FOR VERIFYING THE CORRECT LOCATION OF ALL UNDERGROUND UTILITIES, PIPES, STRUCTURES, AND LINE RUNS IN THE FIELD PRIOR TO THE INSTALLATION OF ANY PLANT MATERIALS.

PLANT LOCATIONS
REFER TO PLANTING PLAN FOR PLANTING LOCATION AND PLANT MATERIAL LEGEND FOR SPECIFICATIONS. MATERIAL LOCATION TO BE STAKED IN THE FIELD AND APPROVED BY LANDSCAPE ARCHITECT PRIOR TO PLANTING.

GRADING AND DRAINAGE
Halff Associates, Inc. ASSUMES NO RESPONSIBILITY FOR FAILURE OF ANY HARDSCAPE AMENITY SUCH AS WALKS, ENTRANCES TO STRUCTURES, AND PLANTER BEDS FORMED OR ENCLOSED BY EDGING AND FLAT WORK WHICH DO NOT DRAIN DUE TO IMPROPER SET UP OF ELEVATIONS DURING CONSTRUCTION. LANDSCAPE CONTRACTOR IS RESPONSIBLE FOR FINE GRADING, AND VERIFYING THAT WATER DRAINS AWAY FROM BUILDING.

COORDINATION
LANDSCAPE CONTRACTOR SHALL BE RESPONSIBLE FOR ANY COORDINATION WITH OTHER CONTRACTORS ON SITE AS REQUIRED TO ACCOMPLISH ALL PLANTING OPERATIONS.

MAINTENANCE
LANDSCAPE CONTRACTOR SHALL BE RESPONSIBLE FOR MAINTAINING ALL PLANTING BEDS IN A WEED AND DEBRIS FREE CONDITION AND SHALL ACCOMPLISH WATERING BY HAND AS DEEMED NECESSARY UNTIL SUBSTANTIAL COMPLETION AND ACCEPTANCE BY THE OWNER. THE CONTRACTOR SHALL MAINTAIN ALL WORK FOR A PERIOD OF 30 DAYS AFTER SUBSTANTIAL COMPLETION AND ACCEPTANCE.

VERIFICATION
LANDSCAPE CONTRACTOR SHALL BE RESPONSIBLE FOR ALL QUANTITIES PER DRAWINGS AND SPECIFICATION BY LANDSCAPE ARCHITECT. PLANT QUANTITIES HAVE BEEN PROVIDED AS A CONVENIENCE ONLY AND SHALL NOT BE CONSIDERED ABSOLUTE. LANDSCAPE ARCHITECT TO BE NOTIFIED IF DISCREPANCIES OCCUR. OTHERWISE, THE CONTRACTOR IS TO BID THEIR OWN VERIFIED QUANTITIES PER LANDSCAPE PLAN.

PLANTING BEDS
ALL BED AREAS ARE TO BE LEFT 3" ABOVE FINISHED GRADE OF ADJACENT PAVEMENT TO INCLUDE 3" OF MULCH AFTER COMPACTION AND SETTLEMENT. ALL BED AREAS SHALL BE ROTOTILLED TO A DEPTH OF 6", ADDING PREPARED SOIL MIXTURE AS REQUIRED.

MULCH
AFTER SETTLEMENT AND COMPACTION, ALL PLANTING BEDS SHALL RECEIVE A MINIMUM 3" LAYER OF MULCH. ALL AREAS DISTURBED BY PLANTING OPERATIONS SHALL BE FINE GRADED AND RE SEEDED.

PLANT MATERIAL STANDARDS
ALL PLANT MATERIAL SHALL CONFORM TO THE SIZES GIVEN IN THE PLANT LIST AND SHALL BE NURSERY GROWN IN ACCORDANCE WITH THE "AMERICAN STANDARD FOR NURSERY STOCK", LATEST EDITION. ALL PLANTING SHALL BE IN ACCORDANCE WITH STANDARD AMERICAN ASSOCIATION OF NURSERYMEN PROCEDURES AND SPECIFICATIONS. LANDSCAPE ARCHITECT SHALL APPROVE ANY PLANT SUBSTITUTION.

PRUNING
ALL TREES ARE TO BE PRUNED AT TIME OF INSTALLATION TO REMOVE DEAD AND UNSIGHTLY LIMBS. ALL TREES ARE TO MATCH IN HEIGHT, SPREAD, AND CLEAR TRUNK, AND SHALL HAVE STRAIGHT TRUNKS.

PLANTING SOIL MIXTURE
50% SAND AND SOIL MIX (SEE DESCRIPTION BELOW)
50% BALANCED COMPOST (SEE DESCRIPTION BELOW)

SAND AND SOIL MIX DESCRIPTION:
SHARP SAND: SAND EXCAVATED FROM A MINIMUM OF 20 FEET BELOW GROUND LEVEL. SCREENED NATIVE SOIL: WELL ADAPTED NATIVE SOIL FROM SOURCES A MAXIMUM DISTANCE OF 200 MILES FROM THE PROJECT SITE.

BALANCED COMPOST DESCRIPTION:
WELL-COMPOSTED, MANUFACTURED SOIL BLENDS
STABLE, AND WEED-FREE ORGANIC MATTER
PH RANGE OF 5.5 TO 8;
MOISTURE CONTENT 35 TO 55 PERCENT BY WEIGHT
100 PERCENT PASSING THROUGH 1-INCH SIEVE
SOLUBLE SALT CONTENT OF 5 TO 10 DECISIEMENS/M
NOT EXCEEDING 0.5 PERCENT INERT CONTAMINANTS AND FREE OF SUBSTANCES TOXIC TO PLANTINGS. PURELY EXCAVATED SOIL WILL NOT BE PERMITTED.
COMPOST CAN HAVE MATERIALS AS FOLLOWS:
1. WOOD DERIVATIVES: DECOMPOSED, NITROGEN-TREATED SAWDUST, GROUND BARK, OR WOOD WASTE; OF UNIFORM TEXTURE AND FREE OF CHIPS, STONES, STICKS, SOIL, OR TOXIC MATERIAL.
   a. LUMBER, EITHER TREATED OR UNTREATED, PALLETS OR CONSTRUCTION WASTE WILL NOT BE PERMITTED AS A WOOD DERIVATIVE
2. MANURE: WELL-ROTTED, UNLEACHED, STABLE OR CATTLE MANURE CONTAINING NOT MORE THAN 25 PERCENT BY VOLUME OF STRAW, SAWDUST, OR OTHER BEDDING MATERIALS; FREE OF TOXIC SUBSTANCES, STONES, STICKS, SOIL, WEED SEED, DEBRIS, AND MATERIAL HARMFUL TO PLANT GROWTH
   a. SEWAGE, SLUDGE, AND RAW MANURE WILL NOT BE PERMITTED
3. LANDSCAPE TRIMMINGS: DECOMPOSED GRASS, LEAVES, WOOD CHIPS, OR BRUSH; OF UNIFORM TEXTURE AND FREE OF STICKS, STONES, OR TOXIC MATERIAL
4. ADDITIONAL REQUIREMENTS:
   a. DEVELOPED USING AN EXTENSIVE AEROBIC COMPOSTING PROCESS.
   b. SCHEDULED TURNS WITH A MINIMUM OF 5 TURNS.
   c. COMPLETELY COMPOSTED FOR A MINIMUM OF 6-12 MONTHS
   d. ACHIEVES A SOLVITA * COMPOST MATURITY INDEX VALUE OF 7 OR HIGHER
   e. MEET OR EXCEED THE TIME AND TEMPERATURE STANDARDS SET IN T.A.C. CHAPTER 332, SUBCHAPTER B, PART 23 AS REQUIRED BY THE TCEQ/TNRCC
   f. MEET FEDERAL SPECIFICATION UNDER GUIDELINES OF 40 C.F.R., PART 503, STANDARDS FOR CLASS A BIOSOLIDS.
   g. HAVE A HIGH CONCENTRATION OF AEROBIC COMPOSTED ORGANIC MATTER AS DETERMINED BY ASTM D-5268 AT 824 F.

TREE SUPPORT
TREES SHALL BE SUPPORTED WITH THE APPROVED METHOD FOR A PERIOD OF ONE YEAR AT WHICH TIME THE OWNER SHALL DETERMINE IF REMOVAL IS NECESSARY.

WARRANTY
ALL PLANT MATERIAL TO BE GUARANTEED FOR A PERIOD OF ONE-YEAR FROM SUBSTANTIAL COMPLETION AND ACCEPTANCE BY THE OWNER.

IRRIGATION SYSTEM
IRRIGATION CONTRACTOR TO INSTALL NEW IRRIGATION SYSTEM TO PROVIDE 100% COVERAGE FOR AFFECTED TURF AND BED AREAS.

PLAN VIEW

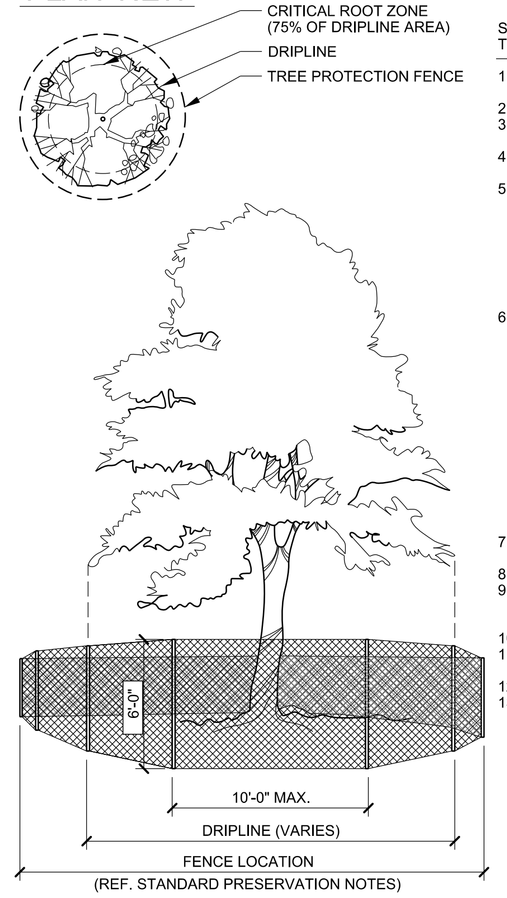

STANDARD PRESERVATION NOTES FOR TREE AND NATURAL AREA PROTECTION

1. All trees and natural areas shown on plan to be preserved shall be protected during construction with temporary fencing and other measures as needed which may include retaining walls, pruning of limbs, roots, etc.
2. Protective fences shall be erected according to City Standards for Tree Protection.
3. Protective fences shall be installed prior to the start of any site preparation work (clearing, grubbing or grading), and shall be maintained throughout all phases of the construction project.
4. Erosion and sedimentation control barriers shall be installed or maintained in a manner which does not result in soil build-up within tree drip lines.
5. Protective fences shall surround the trees or group of trees, and will be located no closer than the outermost limit of branches (drip line) plus an additional 2'-0" away from the limits of dripline. For natural areas, protective fences shall follow the Limit of Construction line, in order to prevent the following:
   A. Soil compaction in the root zone area resulting from vehicular traffic or storage of equipment or materials;
   B. Root zone disturbances due to grade changes (greater than 6 inches cut or fill), or trenching not reviewed and authorized by the City Parks Department;
   C. Wounds to exposed roots, trunk or limbs by mechanical equipment;
   D. Other activities detrimental to trees such as chemical storage, cement truck cleaning, and fires.
6. Exceptions to installing fences at tree drip lines may be permitted in the following cases:
   A. Where there is to be an approved grade change, impermeable paving surface, tree well, or other such site development, erect the fence approximately 2 to 4 feet beyond the area disturbed;
   B. Where permeable paving is to be installed within a tree's drip line, erect the fence at the outer limits of the permeable paving area (prior to site grading so that this area is graded separately by hand prior to paving installation to minimized root damage);
   C. Where trees are close to proposed buildings, erect the fence to allow root pruning in the work space between the fence and the building, prior to disturbance. The fence can be erected at the point of root pruning;
   D. Where there are severe space constraints due to tract size, or other special requirements, contact an Arborist to discuss alternatives.

   Special Note: Exceptions are permitted for areas outside the critical root zone. No disturbances are permitted within the critical root zone (75% of the dripline area). For the protection of natural areas, no exceptions to installing fences at the Limit of Construction line will be permitted, and no silting of stock piling of material or dirt is allowed around trees.
7. Where any of the above exceptions result in a fence being closer than 4 feet to a tree trunk, protect the trunk with strapped-on planking to a height of 8 ft. in addition to the reduced fencing provided.
8. Trees approved for removal shall be removed in a manner which does not impact trees to be preserved.
9. Any roots exposed by construction activity shall be pruned flush with the soil. Backfill root areas with good quality top soil as soon as possible. If exposed root areas are not backfilled within 2 days, cover them with organic material in a manner which reduces soil temperature and minimizes water loss due to evaporation.
10. Trenching required for the installation of irrigation shall be placed as far from existing tree trunks as possible.
11. No landscape topsoil dressing greater than 2 inches shall be permitted within the drip line of trees. No soil or mulch is permitted on the root flare of any tree.
12. Limbing & pruning to provide clearance for structures, traffic and equipment shall take place before damage occurs.
13. All finished pruning shall be done according to recognized, approved standards of the industry (Reference the National Arborist Association Pruning Standards for Shade Trees).

01 TREE PROTECTION DETAIL
SCALE: N.T.S.

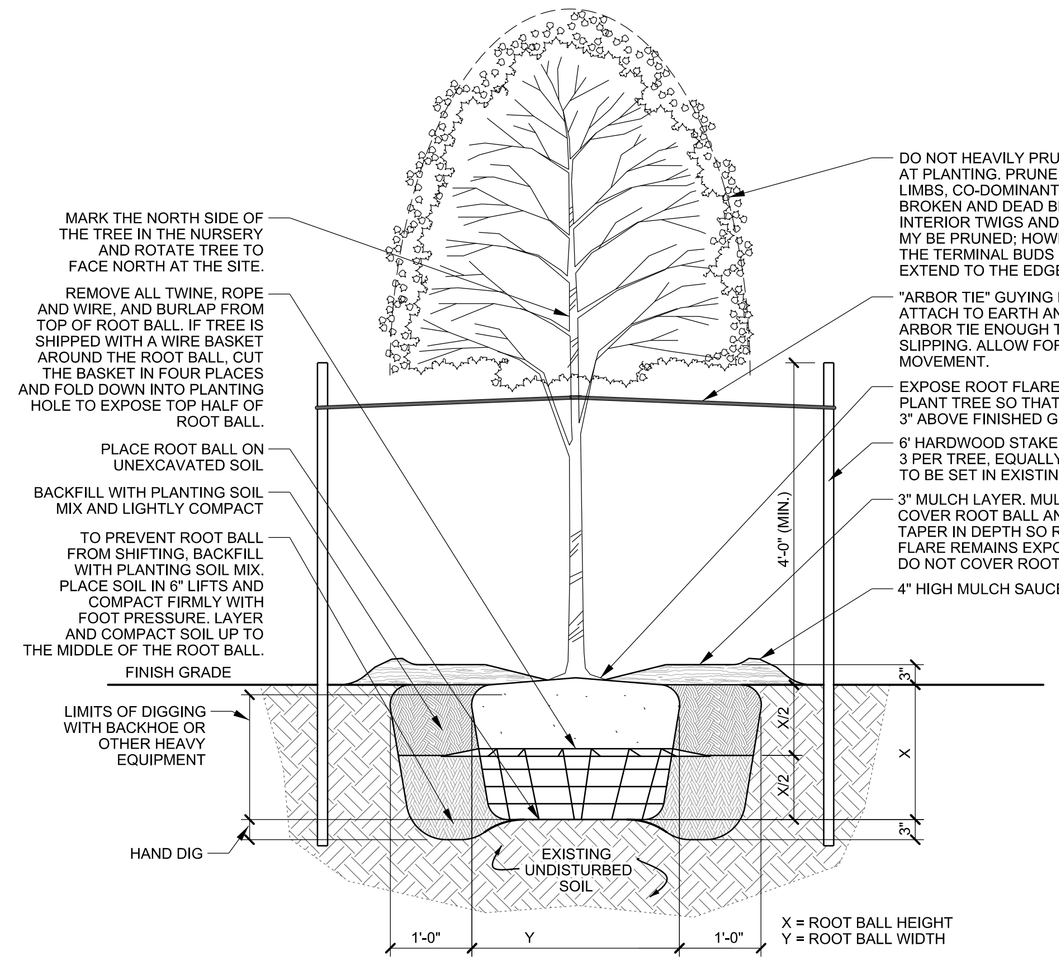

02 SINGLE-TRUNK TREE WITH STAKES
SCALE: 3/4"=1'-0"

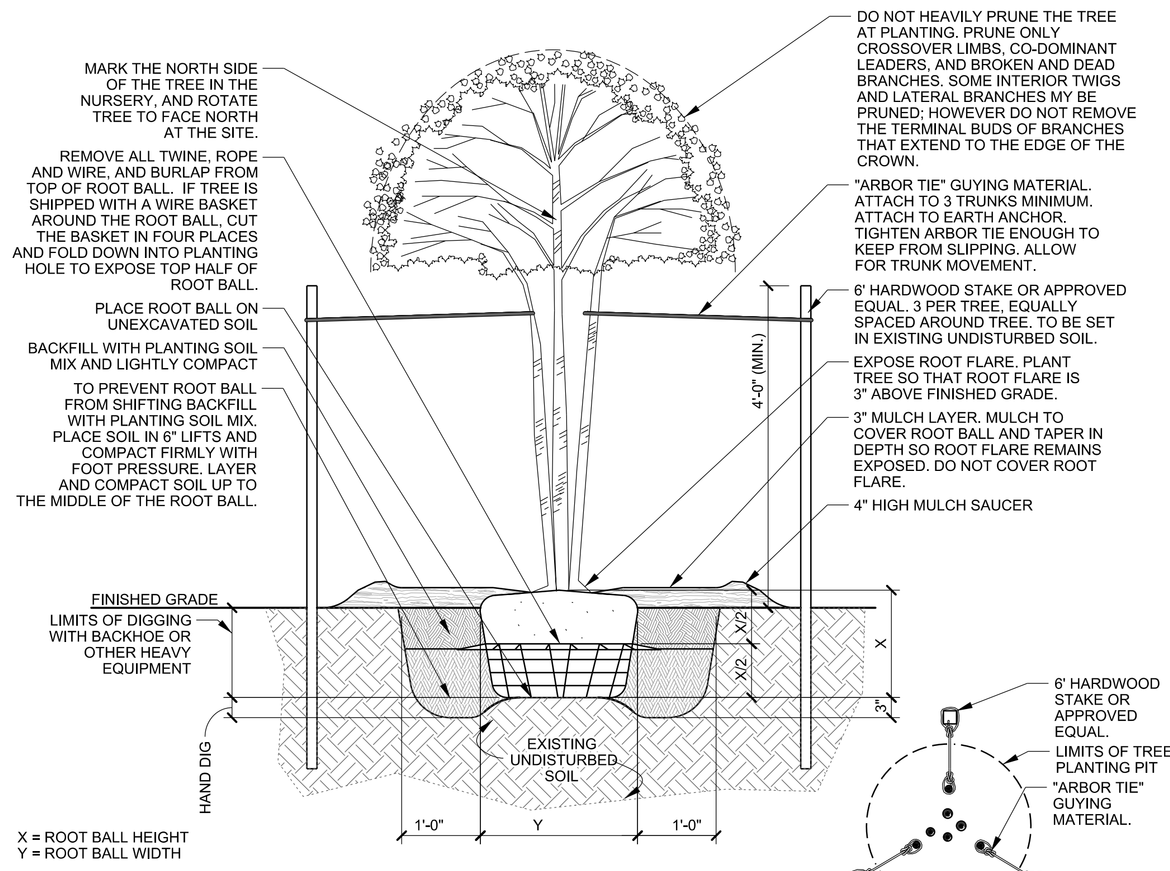

03 MULTI-TRUNK TREE WITH STAKES
SCALE: 3/4"=1'-0"

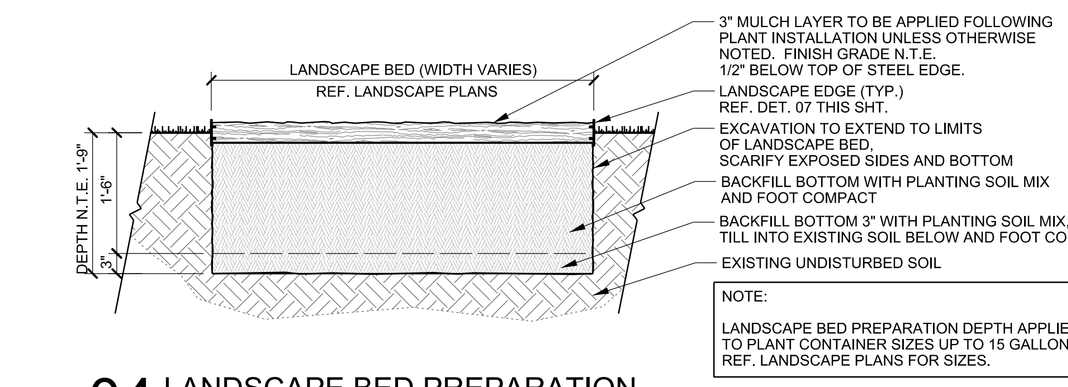

04 LANDSCAPE BED PREPARATION
SCALE: 3/4"=1'-0"

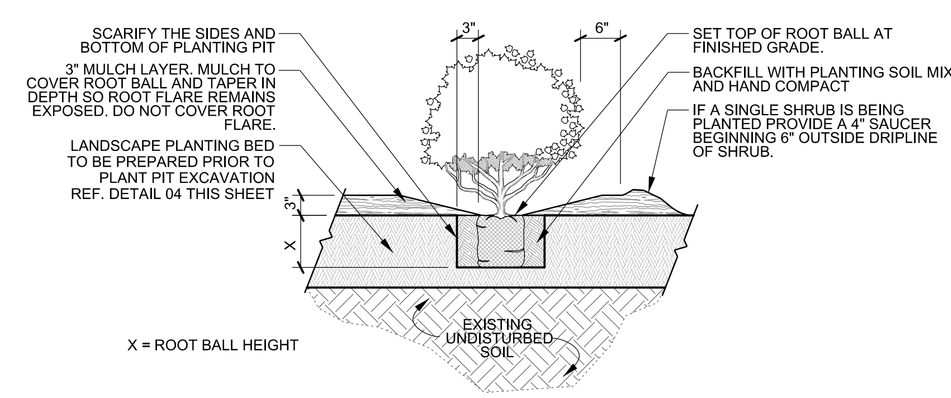

05 SHRUB PLANTING DETAIL
SCALE: 3/4"=1'-0"

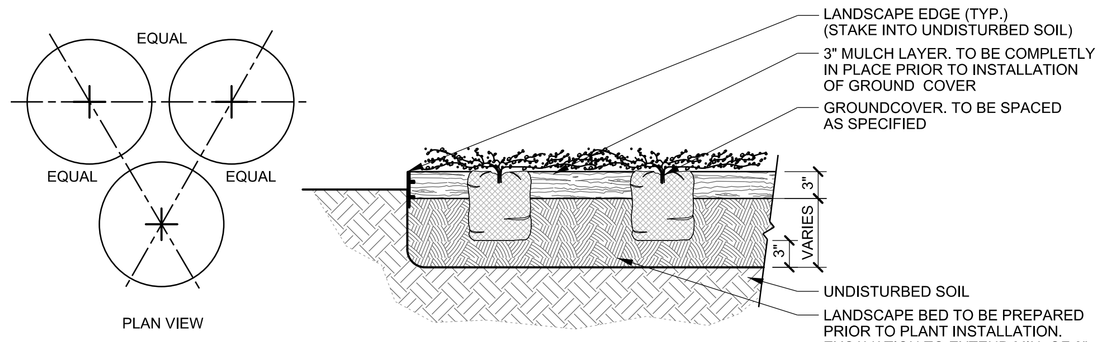

06 GROUNDCOVER PLANTING DETAIL
SCALE: 1"=1'-0" SECTION

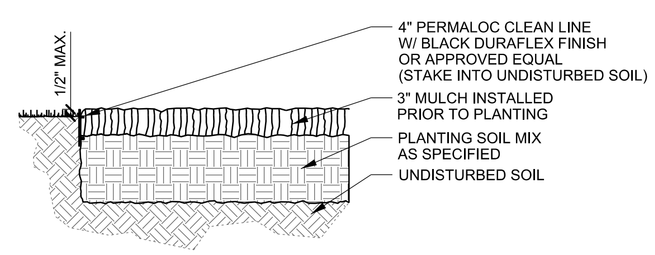

07 LANDSCAPE EDGE (TYP.)
SCALE: 3/4" = 1'-0" SECTION

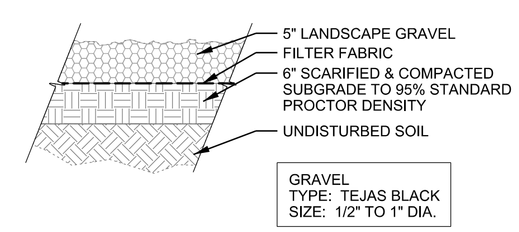

08 LANDSCAPE GRAVEL (TYP.)
SCALE: 3/4"=1'-0" SECTION

OWNER
SFPLP HOLDINGS MANAGEMENT LLC
1250 SOUTH FREEPORT PARKWAY
COPPELL, TX. 75081
CONTACT: RALPH NOVAK
TEL: 817-851-4723
EMAIL: RNovak@beautymanufacture.com

LANDSCAPE ARCHITECT
HALFF ASSOCIATES, INC.
1201 N. BOWSER RD.
RICHARDSON, TX. 75081
CONTACT: KIRK WILSON
TEL: 214-346-6366
FAX: 214-739-0095
TBPE FIRM # F-312
EMAIL: kwilson@halff.com

L2.01 - LANDSCAPE DETAILS

OF A

LOT 1R, BLOCK A
& LOT 3, BLOCK A
11.72 ACRE TRACT

SITUATED IN THE

JOEL WILSON SURVEY, ABSTRACT NO. 1555
&
JAMES A. SIMMONS SURVEY, ABSTRACT NO. 1296
CITY OF COPPELL, DALLAS COUNTY, TEXAS

FOR

NATERRA INTERNATIONAL INC.

BY

HALFF®
1201 NORTH BOWSER ROAD RICHARDSON, TEXAS 75081 (214) 346-6200
TBPLS FIRM NO. 10029600

1/1

AVO: 31760 SCALE: AS SHOWN FEBRUARY 20, 2017